PRODUCT UPGRADE BULLETIN 36487
Brake release pressure monitoring system and automatic brake application

Date:	28/06/2025
Issue:	A
Prepared for:	End Users and Maintainers
Applicable machines:	Minecruiser Mk6, Mk7 & Mk8
Upgrade Kit Part numbers:	Mk7: 7-222010-700 Mk8: 7-222009-700 Other platforms: contact CME

Background

Following a brake dragging incident that occurred on a Minecruiser as described in Bulletin 36395 & resulting upgrades to the detent function being made available in Bulletin 36474.
This bulletin describes an optional brake release pressure monitoring system that may be installed on Mk6, Mk7 and Mk8 Minecruisers.

Communication

The system continuously monitors the hydraulic park brake release pressure in the park/secondary brake line. If pressure drops below a defined threshold—indicating a potential leak or slow release—the system triggers the park brake to apply, and drive to disengage. A visual indicator (eyeball) also alerts the operator of this condition. This further mitigates the risk of continued travel with a partially applied park brake which can lead to premature brake failure.

Benefits

- Provides proactive operator warning for park brake hydraulic pressure loss
- Prevents operation with a partially applied park brake
- Enforces safe release conditions through interlocking with service brake pedal, whereby service brakes must be applied to release park brakes.
- Reduces potential brake system wear and improves operational reliability
- Maintains safe behaviour even under slow-loss hydraulic conditions
- Upgrade may be completed in Cougar workshop or customer site by cougar field service using the supplied upgrade kit.

Impact to Design Registration MDR 095324 TBS

The change to the pneumatic systems and other functions has been independently verified as having an equivalent level of health and safety. Additionally, the upgrade has been design registered as an alteration to the Minecruiser Transport Braking system MDR 095324 TBS -5.

Any Minecruiser vehicle with MDR 095324 -3/3a or -4 can be upgraded to the latest revision by using the highlighted kits and instructions to verify compliance as provided in Bulletin 36474.
It is recommended this work be completed by Cougar.
Refer to Bulletin 36474. For MDR 095324 -2 or older, please contact CME for upgrade options.

References:

1. Product Safety Bulletin 36474 – Minecruiser Park Brake Valve Improvement
2. Product safety Bulletin 36395 – Minecruiser Park Brake Valve unintentional application leads to brake drag
3. Design registration drawing MC49200 sheet 4 revision 08

Please distribute this bulletin to all relevant personnel

Cougar Contacts in respect to this bulletin

Operations Manager	Jacob Cassar	0410 042 501
Compliance and Business Improvement	Bill Davidson	0409 562 385
Workshop Manager QLD	Mick Ruhl	0428 561 237
Workshop Manager Mackay	Steve Morris	0483 205 411
Product support NSW	Josh Preece	0419 880 414
Product support south coast NSW	Cameron Pike	0428 628 944
Spare Parts Manager	Greg Davies	0422 025 295

Schematic from MDR for Reference Only

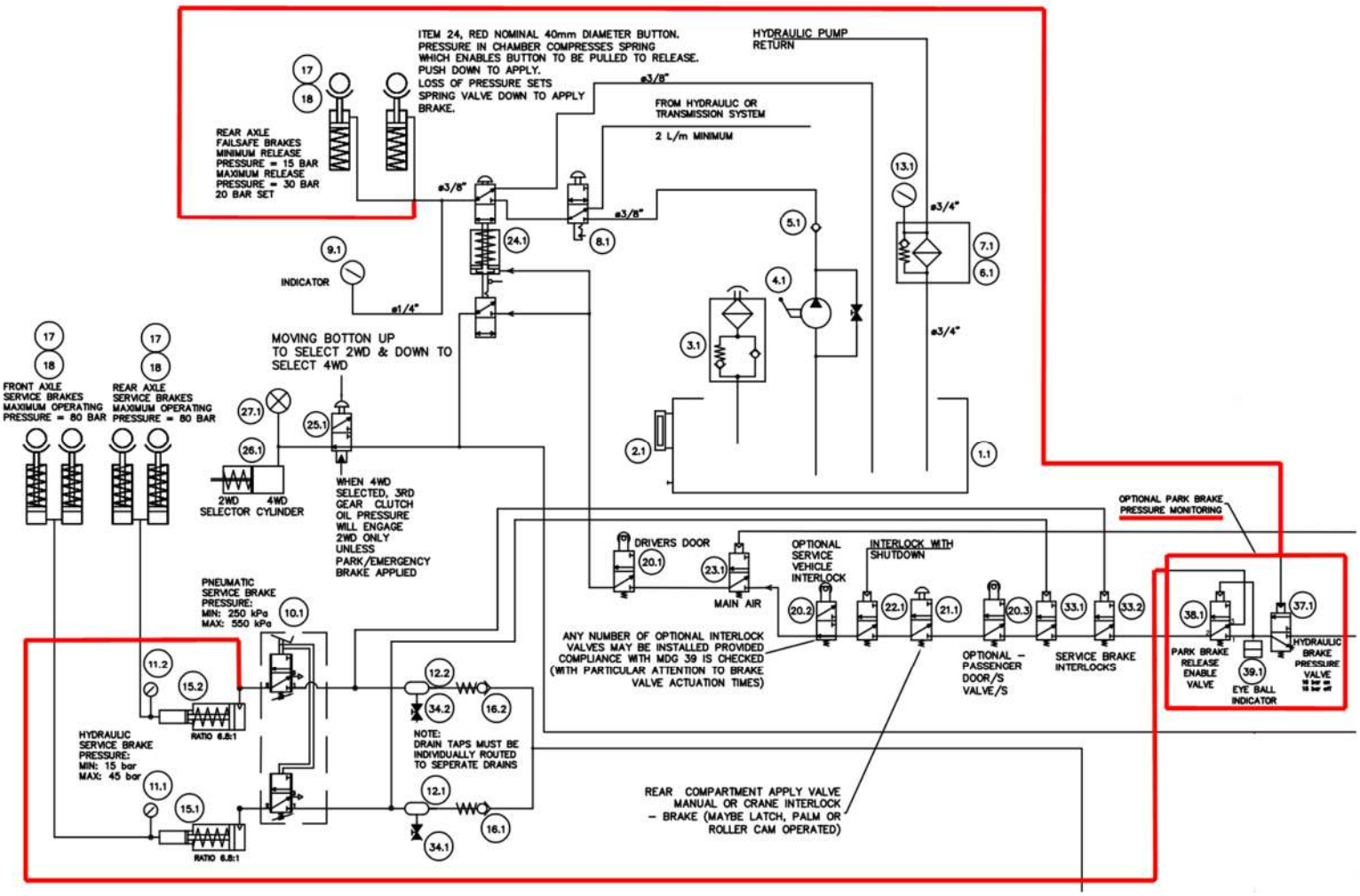

NOTES:
1. HOSE KIT 7-076894-700 NOT SHOWN

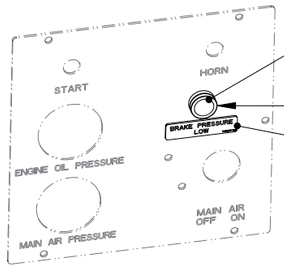

3 407 7

6

DRILL SUITABLE SIZED HOLE FOR
EYEBALL AND PLACE LABEL.
DASH PANEL SHOWN FOR REFERENCE ONLY

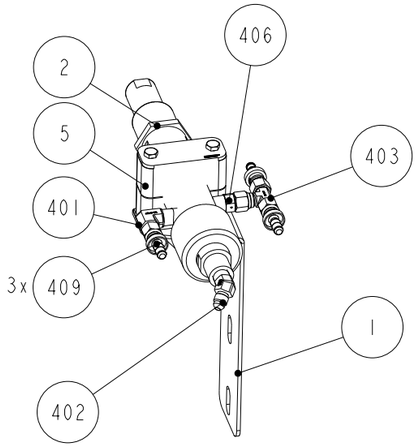

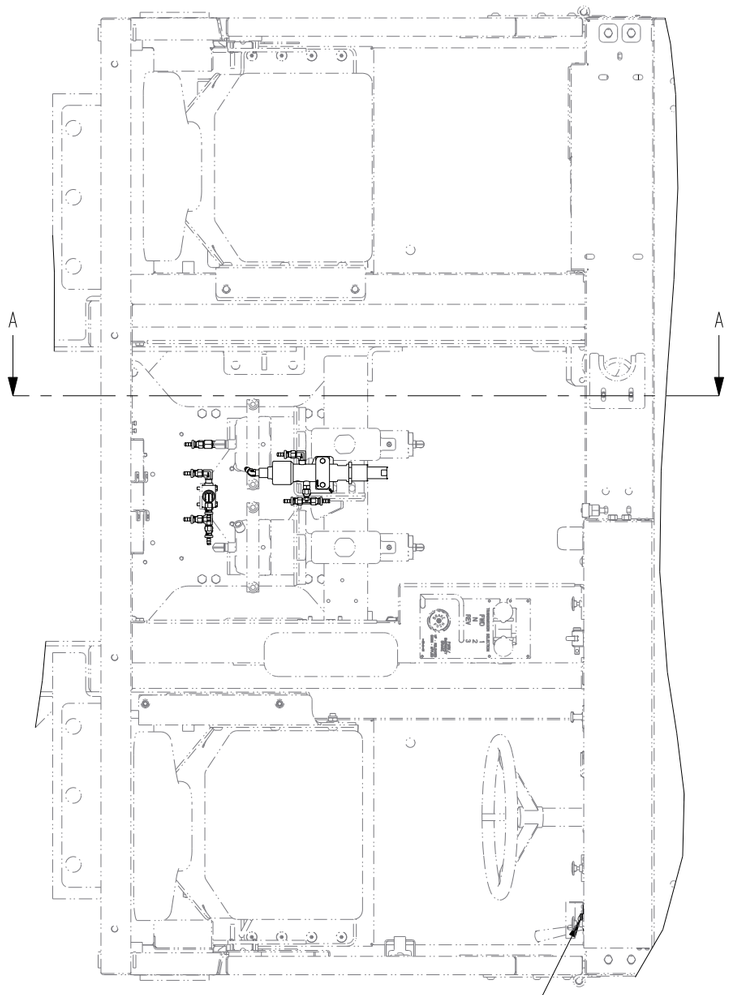

MK8 TOP VIEW
SCALE 3:40
NOTE, SOME COMPONENTS
REMOVED FOR CLARITY

EYEBALL INDICATOR

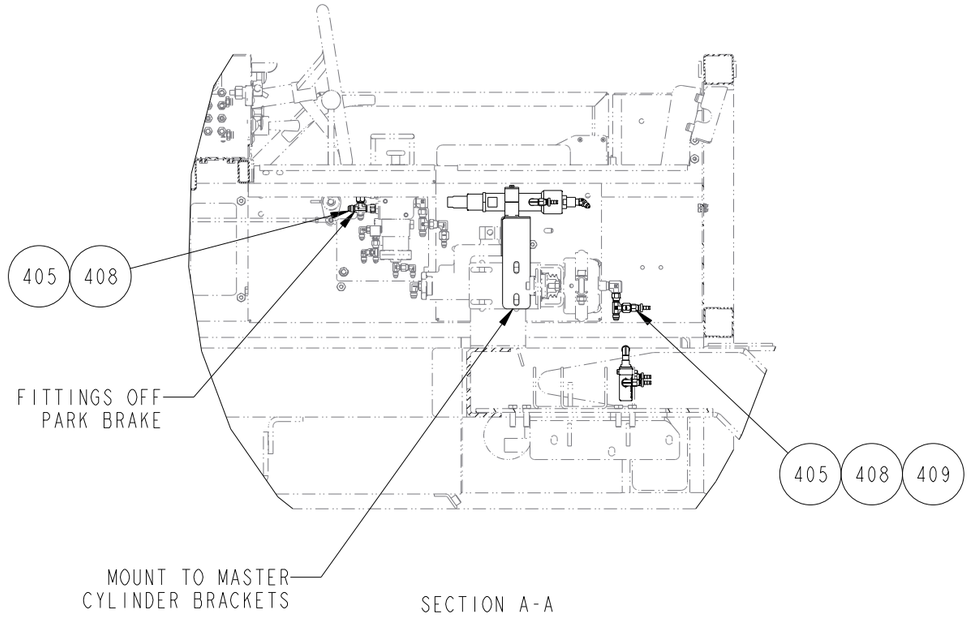

SECTION A-A

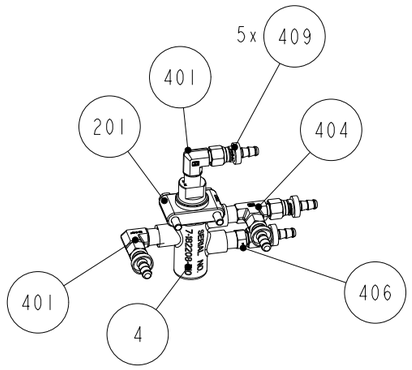

REV.	DATE	DESCRIPTION	DRAWN	CHECK.
A	1/05/2025	RELEASED FOR MANUFACTURE	MKA	MR

DO NOT SCALE
IF IN DOUBT, ASK

UNINDICATED TOLERANCES TO ISO 286-2:
JS12 FOR MACHINING, JS14 FOR FABRICATION & ± 0.5° FOR ANGLE

⊥: PERPENDICULAR
//: PARALLELISM
◎: CONCENTRICITY
▱: FLATNESS
—: STRAIGHT
Ⓜ: MAX. MATERIAL CONDITION.

THIS DRAWING IS STRICTLY CONFIDENTIAL AND MUST NOT BE COPIED, REPRODUCED, MANUFACTURED OR SUPPLIED FROM WITHOUT PERMISSION OF COUGAR

CHECK COUGAR'S ORDER MATCHES THIS DRAWING NUMBER AND REVISION BEFORE MANUFACTURE

COUGAR QA018

	DRAWN	CHECKED	APPROVED
NAME	MKA	MR	L.norris
DATE	1/05/2025	1/05/2025	7/05/2025

SCALES 1:5
A3

PARK BRAKE MONITORING KIT
MINECRUISER MK8
SHEET 1 OF 1

COUGAR

DRG. No. 7-222009-700
REV. A

PARTS LIST

Drawing No: 7-222009-700
Description: Park Brake Pressure Monitor Kit MK8
Revision No: A **Date Approved:** 1/05/2025

Line No	Code	Rev	Description:	Unit	Quantity
1	7-027891-700		Brake Pressure Valve Bracket Mk8	Each	1
2	7-162089-700 2_1		PILOT VALVE, 3/2 MAIN AIR, 2/1 piston configuration	Each	1
3	7-181815-708	-	Rotowink Indicator Small Red/Green	Each	1
4	7-182208-710	A	Pilot Valve Pneu Pilot/Spring Return	Each	1
5	7-193598-700		STAUFF CLAMP 38MM	Each	1
6	7-194277-700		Park Brake Pressure Monitoring Label	Each	1
7	7-161899-700	A	1/8" BSPP - 1/8" NPT Union	Each	1
201	BM6X4088Z		M6 X 40 8.8 Z/P HEX HD BOLT	Each	2
400	7-630348-700	A	FITTINGS KIT - Park Brake Monitoring Kit MK7&8	Each	1
600	7-076894-700	A	Park Brake Monitoring Hose Kit Mk8	Each	1

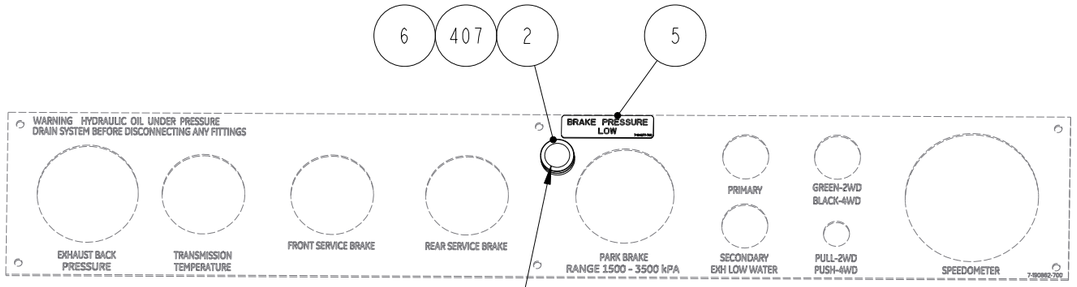

DRILL SUITABLY SIZED HOLE FOR
EYEBALL AND PLACE STICKER.
CENTRE DASH PANEL SHOWN FOR REFERENCE ONLY.

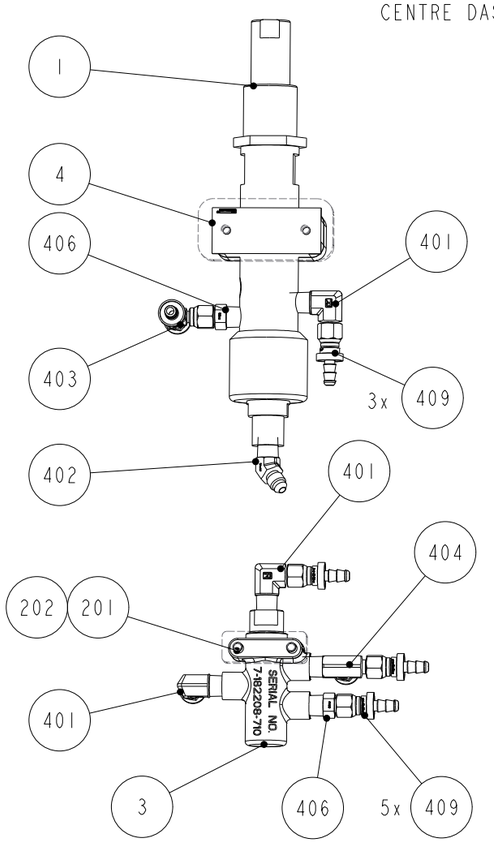

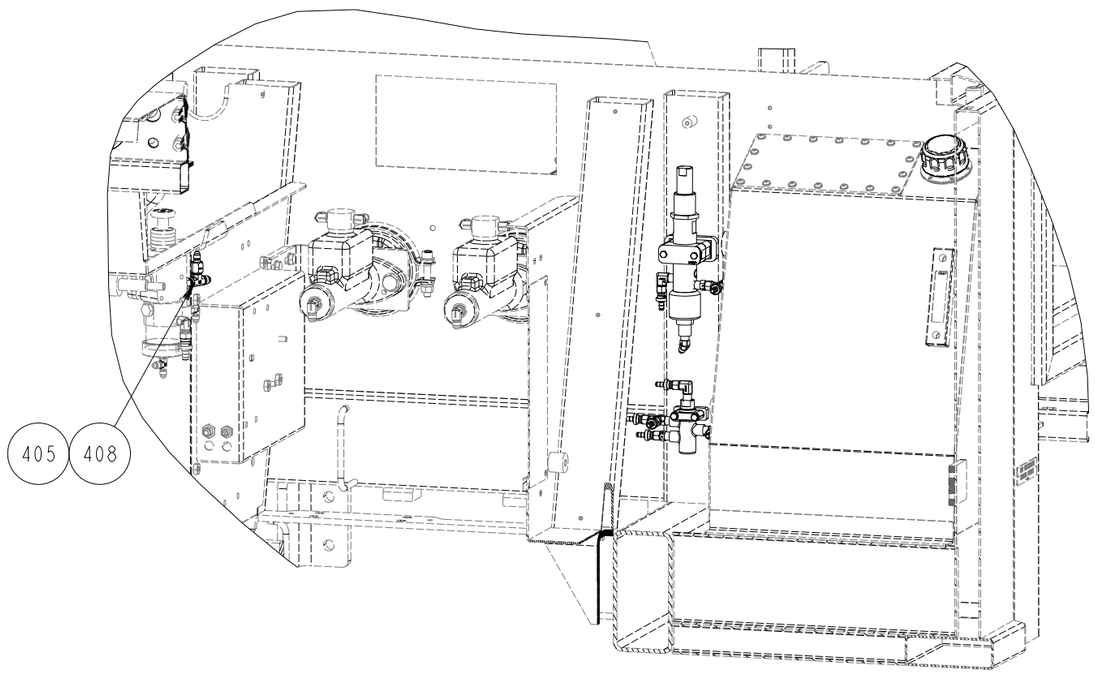

SECTION A-A
SCALE 1:10

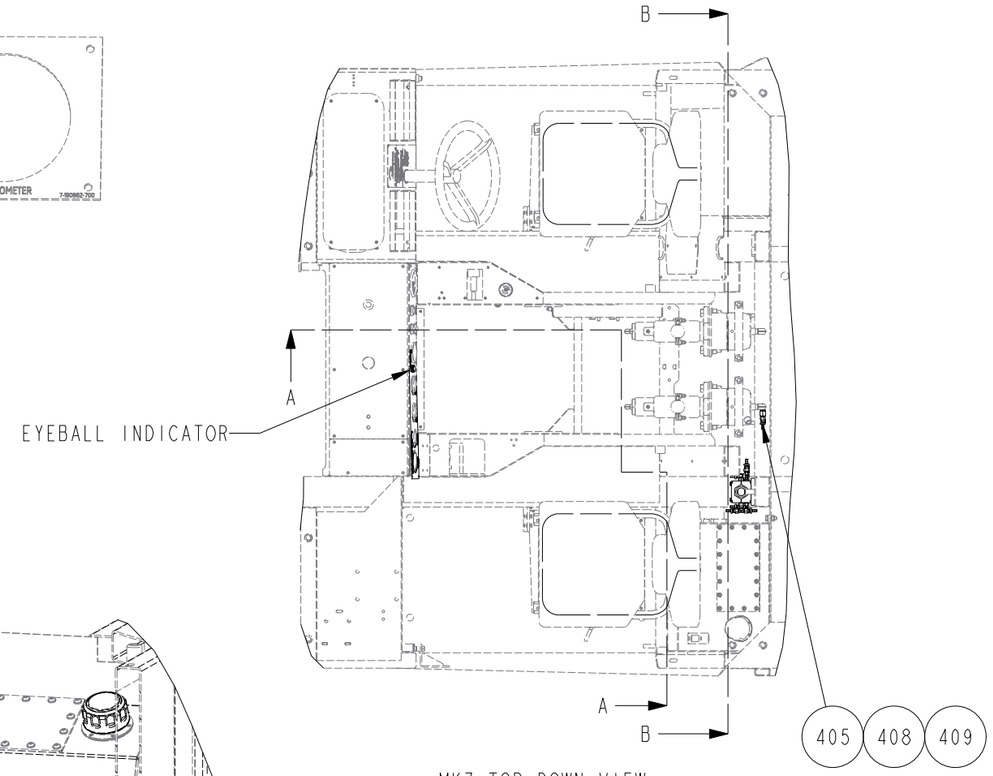

MK7 TOP DOWN VIEW
SCALE 1:20

NOTES:
1. HOSE KIT 7-076893-700 NOT SHOWN.

REV.	DATE	DESCRIPTION	DRAWN	CHECK.
B	25/06/2025	REMOVED TAPPING PLATES AND SUBSEQUENT WELDING REQUIREMENTS	MKA	GM
A	1/05/2025	RELEASED FOR MANUFACTURE	MKA	

DO NOT SCALE
IF IN DOUBT, ASK

UNINDICATED TOLERANCES TO ISO 286-2:
JS12 FOR MACHINING, JS14 FOR FABRICATION & ± 0.5° FOR ANGLE

⊥: PERPENDICULAR
//: PARALLELISM
◎: CONCENTRICITY
▱: FLATNESS
—: STRAIGHT
Ⓜ: MAX. MATERIAL CONDITION.

THIS DRAWING IS STRICTLY CONFIDENTIAL AND MUST NOT BE COPIED, REPRODUCED, MANUFACTURED OR SUPPLIED FROM WITHOUT PERMISSION OF COUGAR

CHECK COUGAR'S ORDER MATCHES THIS DRAWING NUMBER AND REVISION BEFORE MANUFACTURE

COUGAR
QA018

	DRAWN	CHECKED	APPROVED
NAME	MKA	MR	C. Morris
DATE	1/05/2025	1/05/2025	25/06/2025

SCALES 1:4
A3

PARK BRAKE MONITORING KIT
MINECRUISER MK7
SHEET 1 OF 2

COUGAR

DRG. No. 7-222010-700
REV. B

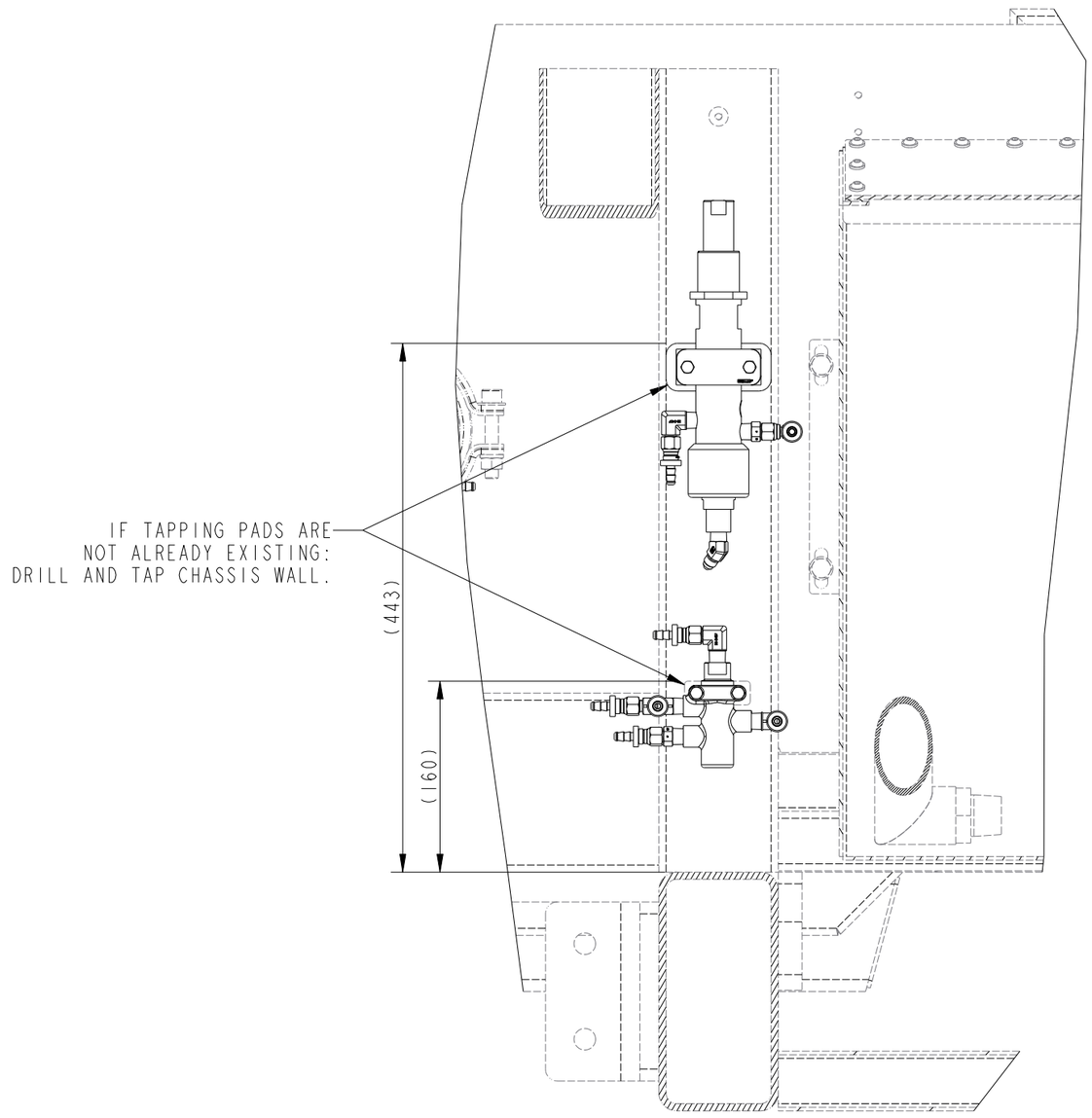

SECTION B-B
SCALE 1:5

NOTES:
- IF TAPPING PADS ARE NOT INSTALLED ALREADY, DRILL AND TAP CHASSIS WALL.
- REMOVE ALL BURRS AND SHARP EDGES

REV.	DATE	DESCRIPTION	DRAWN	CHECK.
B	25/06/2025	REMOVED TAPPING PLATES AND SUBSEQUENT WELDING REQUIREMENTS	MKA	GM
A	1/05/2025	RELEASED FOR MANUFACTURE	MKA	

DO NOT SCALE
IF IN DOUBT, ASK

UNINDICATED TOLERANCES TO ISO 286-2:
JS12 FOR MACHINING, JS14 FOR FABRICATION & ± 0.5° FOR ANGLE

⊥: PERPENDICULAR
//: PARALLELISM
◎: CONCENTRICITY
▱: FLATNESS
—: STRAIGHT
Ⓜ: MAX. MATERIAL CONDITION.

THIS DRAWING IS STRICTLY CONFIDENTIAL AND MUST NOT BE COPIED, REPRODUCED, MANUFACTURED OR SUPPLIED FROM WITHOUT PERMISSION OF COUGAR

CHECK COUGAR'S ORDER MATCHES THIS DRAWING NUMBER AND REVISION BEFORE MANUFACTURE

COUGAR
OA018

	DRAWN	CHECKED	APPROVED
NAME	MKA	MR	G. Morris
DATE	1/05/2025	1/05/2025	25/06/2025

SCALES 1:4
A3

PARK BRAKE MONITORING KIT
MINECRUISER MK7
SHEET 2 OF 2

COUGAR

DRG. No. 7-222010-700
REV. B

PARTS LIST

Drawing No: 7-222010-700
Description: Park Brake Pressure Monitor Kit Mk7
Revision No: B **Date Approved:** 25/06/2025

Line No	Code	Rev	Description:	Unit	Quantity
1	7-162089-700 2_1		PILOT VALVE, 3/2 MAIN AIR, 2/1 piston configuration	Each	1
2	7-181815-708	-	Rotowink Indicator Small Red/Green	Each	1
3	7-182208-710	A	Pilot Valve Pneu Pilot/Spring Return	Each	1
4	7-193598-700		STAUFF CLAMP 38MM	Each	1
5	7-194277-700	A	Park Brake Pressure Monitoring Label	Each	1
6	7-161899-700	A	1/8" BSPP - 1/8" NPT Union	Each	1
200	7-610538-700	A	FASTENER KIT - Park Brake Monitoring Kit MK7&8	Each	1
400	7-630348-700	A	FITTINGS KIT - Park Brake Monitoring Kit MK7&8	Each	1
600	7-076893-700	A	Park Brake Monitoring Hose Kit Mk7	Each	1